electrometal
GEORGE MATTHAIOU & SIA O.E.
ELEVATOR ACCESSORIES

6th Km Thessalonikis - Oreokastrou Rd
Tel.:(0030)(2310) 682.486,682.897-8
Fax:(0030)(2310) 681.950
Zip code: 56410
P.O. Box: 40182
www.electrometal.gr

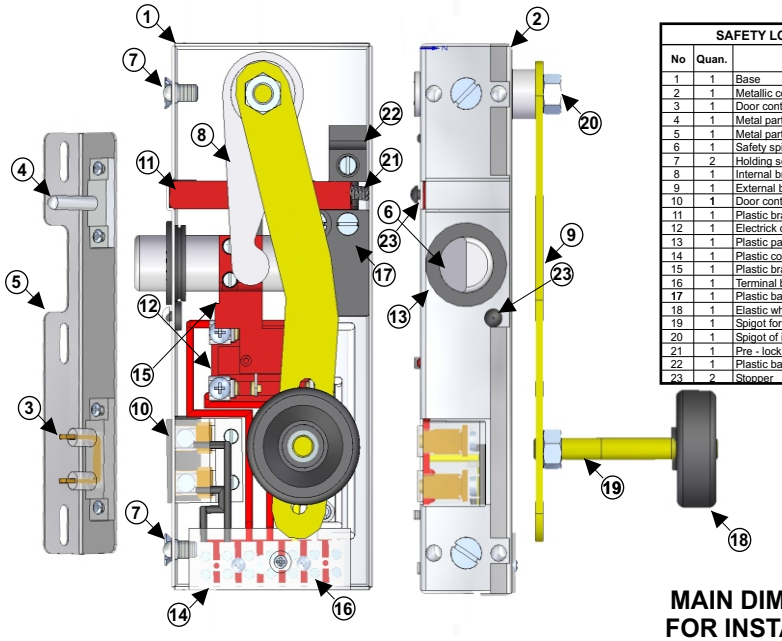

SAFETY LOCK TH PART LIST		
No	Quan.	Component
1	1	Base
2	1	Metallic cover
3	1	Door contact metal bridge
4	1	Metal part for activation of pre - locking
5	1	Metal part
6	1	Safety spigot
7	2	Holding screws
8	1	Internal branch
9	1	External branch
10	1	Door contact
11	1	Plastic branch of pre - locking
12	1	Electrick contact
13	1	Plastic part for movement of safety spigot
14	1	Plastic cover
15	1	Plastic branch of electrick contact
16	1	Terminal blocks
17	1	Plastic base of safety spigot
18	1	Elastic wheel
19	1	Spigot for the elastic wheel
20	1	Spigot of internal branch
21	1	Pre - locking spring
22	1	Plastic base of pre - locking branch
23	2	Stopper

MAIN PHASES OF FUNCTION OF SAFETY LOCK TH

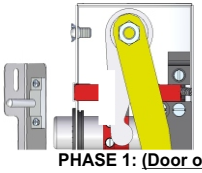

PHASE 1: (Door open)
The safety spigot is outside the elevator door and it has stop on the elastic stopper of the safety lock.

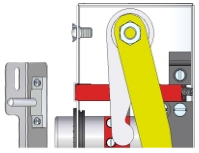

PHASE 2: (Door open- car not moving)
Activation of safety(pre-locking). The distance of contacts inside the electric contact is about 7mm. The metal part for the activation of pre - locking is inside the safety lock for the half of the movement of pre - locking branch and the safety spigot is in front of the elevator door.

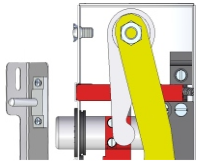

PHASE 3: (Door closed and secured)
The safety spigot is inside the elevator door for about 16mm. The pre - locking branch made all its movement so the movement of safety spigot is completely free.

MAIN DIMENSIONS FOR INSTALLATION OF SAFETY LOCK TH

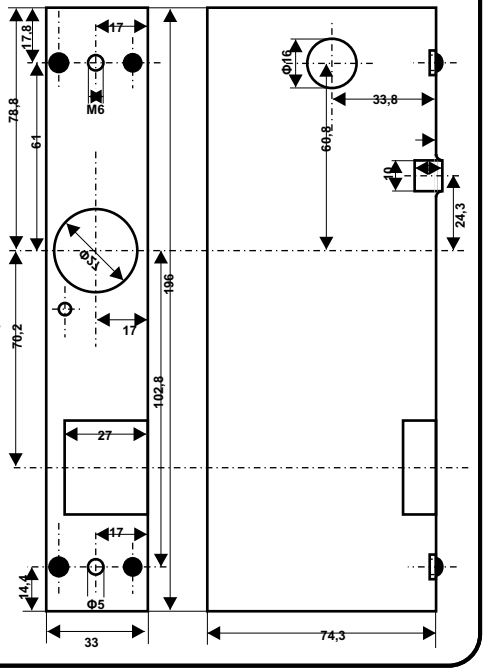

electrometal
GEORGE MATTHAIOU & SIA O.E.
ELEVATOR ACCESSORIES

6th Km Thessalonikis - Oreokastrou Rd
Tel.:(0030)(2310) 682.486,682.897-8
Fax:(0030)(2310) 681.950
Zip code: 56410
P.O. Box: 40182
www.electrometal.gr

1.Introduction

The provision of the safety lock with safety lock system type H (TH), which is constructed by “ELECTROMETAL – G. MATTHEOU & SIA OE.”, is suitable for elevator’s semi-automatic doors (single or multi panel) (elevator driven by electricity or hydraulic). The nominal elements of the safety lock’s function is 42V/0,45A D.C. & 110V/0,15A D.C. It has provisions of mechanical & electrical control of the safety position. It has spring, adaptable to the safety spigot, which assures the compulsory return to its safety position, excluding this way the safety lock’s jamming, because of external intervention. Also, the safety spigot, on its external side, has an angle cutting, which allows the safety lock to lock only from the returnable spring & the elevator’s suspension. The safety lock type H (TH) satisfies the demands of protype EN 81,1&2 (safety rules for the construction & installation of the elevators, driven by electricity & hydraulic), EN 60947-5-1 (devices of interruption & control of low tension / Part 5: Devices & interruption elements for circuit control / Section 1: electromechanical devices for circuits control), EN 60529 (safety from accidents) & elevator’s instruction 95/16/EK. The plans that accompany every time the approval type “CE”, are part or the installation’s instructions.

2.Construction

There is a safety lock’s construction plan on page 1.

3.Description of function

According the three phases described on page 1.

4. Way of installation

At the door’s frame, the door’s manufacturer makes two holes with diameter Φ8,5mm with milling-machine in a distance between them l=164mm & at the corresponded height from the under side of the door, at the frame’s side, opposite the hinges. The safety lock is fastened in front with two screws M6x12 DIN 965, which exist on the safety lock, so that when the safety spigot is getting in, to be at the same straight with the frame’s side. The only thing that must be noted is the hole’s center of spigot that exists on the door’s leaf to be identical with the spigot’s center of the lock. For this reason, the hole for the safety spigot on the door’s leaf must have bigger diameter from the diameter of the safety spigot. The corresponded holes for the pre-locking branch & the door’s contact must be noted, too. After the safety lock has been installed at the height of the door’s contact, if this version exists, the door mechanism is installed, too, that is, the right position of fastening are marked & simultaneously holes are opened so that the door’s mechanism can be fixed. This last one, through the oval holes that it has, can be fixed in both shafts, so that the restoration of the circuit will be certain. The relative drawing is in this page.

5.Regulation-Wiring

The safety lock’s cabling can be done through it’s sevenfold terminal block. Where the electrical connections are made with the whole elevator’s provision, according to the relevant self-adhesive label that exists on the safety lock. As we are looking the safety lock at the two left receptions of the terminal block are connected the cables of the door contact (black cables), at the next two, the cables of the contact of the safety lock (red cables), the next reception is for ground (yellow-green cable) and finally at the two right receptions are connected the contact for car present contact . To be clarified that the distributed locks of one elevator’s provision are connected in line among them. The safety lock type H (TH) has been controlled as far as the strength of the electric contacts concerns at a rate of 42V-0,9A D.C./110V-0,3A A.C. The nominal sizes of the lock are 42V-0,45A D.C./110V-0,15A A.C. The safety lock type H (TH) has been regulated during the production for the best function & attribution, that’s why any interference or re-regulation of the inner functioning mechanism is not allowed. Furthermore, the regulation of the door mechanism of the door’s contact & the metallic outer branch is allowed through the holes that has.

6. Control-Maintenance

For the control of the situation of the safety lock type H (TH), the situation of the electric contact, should be checked in regular time, because their metal parts are always under tension, as well as the restoring of the electric circuit of the electric contact according to the position of the lock-unlock of the safety spigot.
The lock type H (TH) doesn’t have any other special demands of maintenance, because of the best materials & strict specifications that are used for its construction. In rare occasions the greasing of the moving parts is demanding or the blowing in the inside of the lock for the dust cleaning that may exist after its use for a long time. Anyway, the safety lock must be checked in the regular maintenances of the whole elevator’s provision. To be clarified that some parts of the lock are possible to be replaced during these maintenances, either because of damage or because of time.